XKB

INDUSTRIAL JOYSTICK

The XKB Joystick is designed for various secondary circuits with AC 50Hz (60Hz), supporting a rated voltage up to 380V (440V). It enables motor commutation, speed control, braking, and linkage functions. This joystick can be installed on console surfaces or in portable control boxes, making it ideal for both light and heavy lifting equipment and driving applications that require a fixed console.

Technical Data

Model		XKB-A	XKB-E
Direction		4Direction, can be linked	•
Amount of movement		2	•
Amount of notches in each direction		3	•
Type of movement	Notched·Hold position/spring return	•	•
	unnotched·spring return	•	•
Operating schemes		Standard CAM assembly	Custom CAM combination
Maximum number of contacts per movement		16	•
Mechanical Life(in millions of operating cycles)		1	•
Control device		Vertical centering	•
Handle	1 Standard	•	•
	2 Mechanical zero interock	•	•
	4 With zero mechanical & electrical interlocks	•	•
	5 Push-down type	•	•
	6 Button with fat or convex head	•	•
	9 Other	•	•
Maximum numper of potentiometers per movement		1 or2 pairs	•

Model	XKB-A: predefined, non modifiable scheme XKB-E: variable composition scheme
Direction	4Direction, can be linked
Control lever	140mm maximum travel in one direction:28°
Amount of notches in each direction	3
Type of lever movement	①Notched positions, hold position: up to 3 gears(12°,20°;28°)in one direction
	②Notched positions, spring return: up to 3 gears(12°,20°,28°)in one direction
	③Unnotched position, spring return: 28° travel in one direction
Contact	Contact block with 4 contacts + 1 zero position contacts Each type of contact block allows the user to use 1 additional pair of contacts
Contact closing sequence	XKB-A standard scheme . Each movement has 4 pairs of contacts + 1 pair ofzero position contacts: each movement has 2 palrs of direction contacts,2 pairs of functional contacts, and 1 pair of zero position contacts.
	XKB-E customized scheme · Each movement has 4 pairs of contacts + i pair of zero position contacts: each movement mechanism has 4 pairs of contacts and i pair of zero position contacts.
Electrical Life	1 million
handle Grip position	Vertical center
Handle	1 Standard handle:with zero(centre)position contact (closed at zero) 2 With zero mechanical interlocking wizero mechanicalock and the center of the closed contact 4 Push handle: The contact associatedMith it opens when the handle is released 5 Flat button handle: When the button isreleased, the associated contact breaks 6 Raised button handle: When the buttois released,the associated contact opens 9 Round head push-down handle typewhen the button is released, the associated off contact
Maximum number of potentiometers per movement : 2 Pairs	

Grip

handle number	handle type	B
1	Standard handle	137-142mm
2	With zero mechanical interocking electrical interlocks	137-142mm
4	push handle	138-143mm
5	Flat head push-button type	137-142mm
6	Convex head push-button type	141-146mm
9	Round head push-down handle type	141-146mm

Contact Arrangement

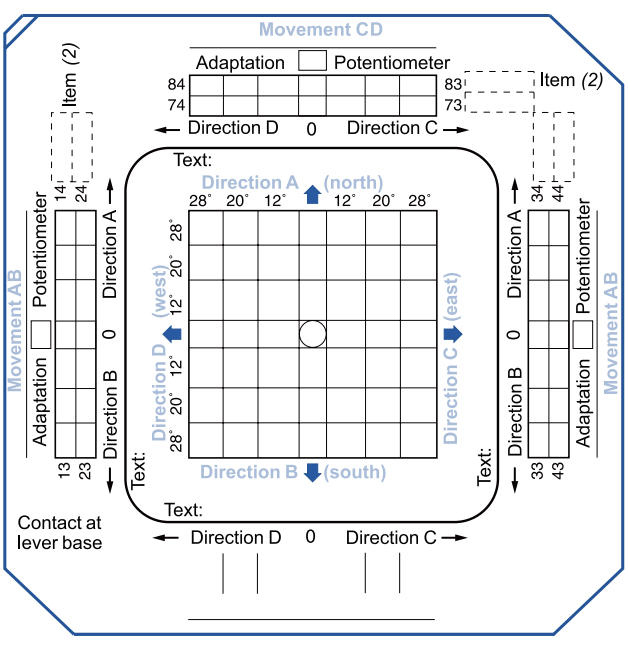

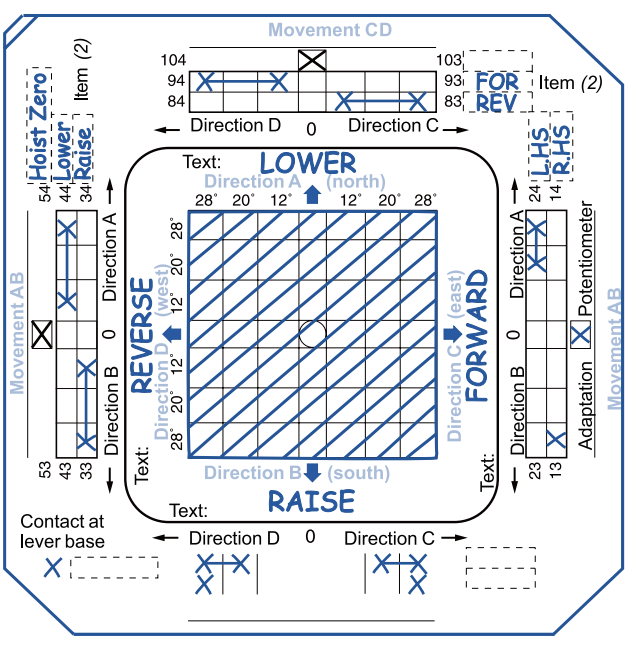

Selection

Lever	handle	handle	CD direction: Contacts	CD direction: lever movement	handle	Contact arrangement

- A:Standard
- E:Special

- 4 contacts
  1: screw connection
  2: 6.3m clip connection
- 4+1 contacts
  3: screw connection
  4: 6.3m clip connection

- 1: Standard handle + zero contact (closedat zero)
- 2: With zero mechanical interocking electri;al interocks(contact closed at zero2 position)
- 4: Push-down handle (contacts open whe handle is released)
- 5: Flat head push-button type(contacts open when handle is released)
- 6: Convex head push-button type (contacts open when handle is released)
- 9: Round head push-down handle type(contacts open when handle is released)

- 0: No need 0
- 1: Notched positions, hold position
- 3: Notched positions, spring return
- 2: Unnotched positions, spring return(1)

- 0: No need
- 1: Notched positions, hold position
- 3: Notched positions, spring return
- 2: Unnotched positions, spring return

- With frame only(no potentiometer)
  4: AB Direction
  5: CD Direction
  6: AB+CD Direction
- With frame+potentiometer
  7: AB Direction
  8: CD Direction
  9: AB+CD Direction
- 0: No potentiometer

- See the page 50

Note:
(1) This type of movement is recommended for the handle when using a potentiometer.
(2) The resistance value of the potentiometer needs to be stated in the order form.

Dimensions

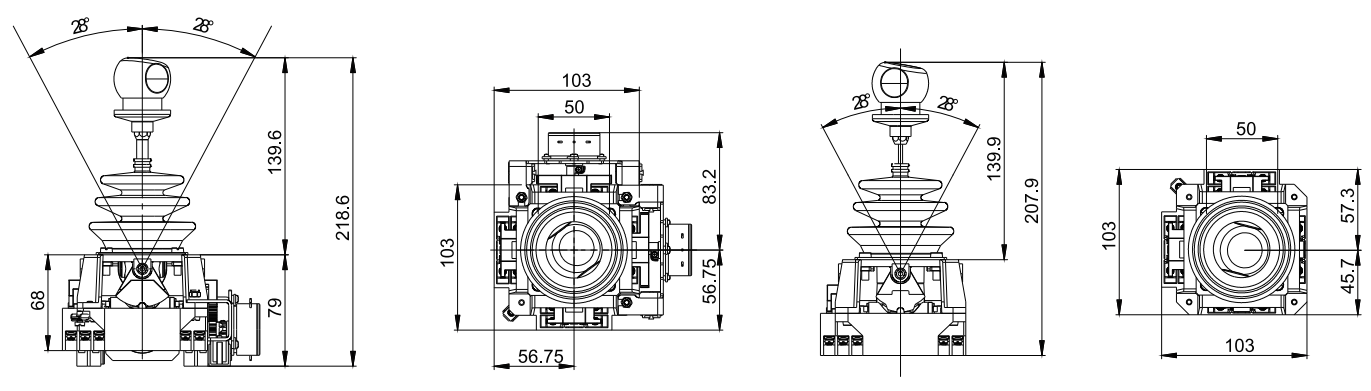
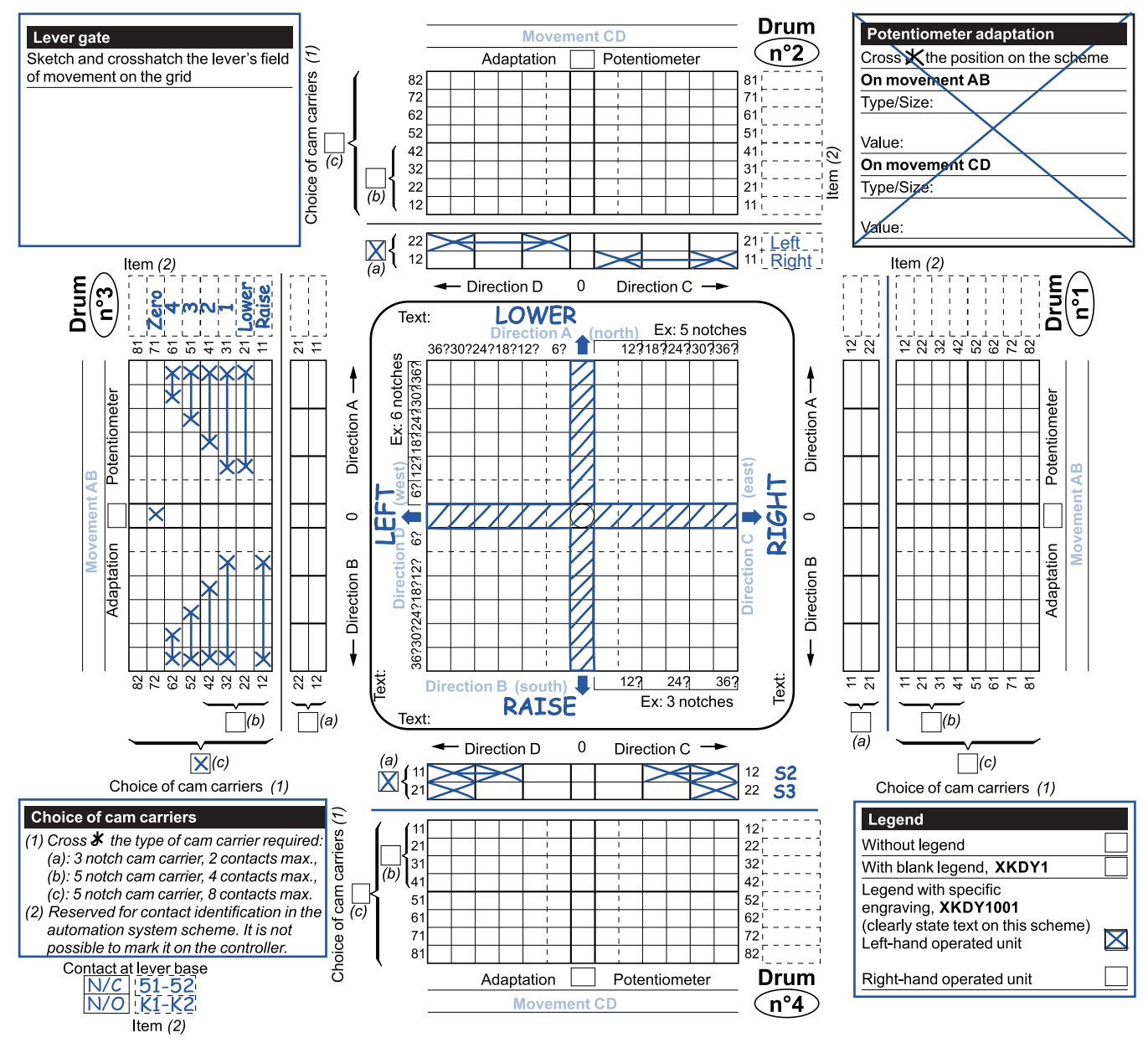
Contact Arrangement